RADAR ANTENNAS SERIES ASX-2101/HVC • ASX-1901A/HVC

GENERAL DESCRIPTION

The X band GEM ASX-2101/HVC • 1901A/HVC Series is designed for VTS and coastal surveillance purposes. It is based on slotted waveguide aerials to allow high azimuth discrimination through its narrow horizontal beamwidth and high gain.
Its most outstanding feature is the capability to operate with horizontal, vertical or circular polarizations remotely switched by the operator in order to accommodate differing operational philosophies.
As it can be configured with a variable speed facility, it can be quite readily adapted to practically any X-band transceiver and display system.
Using a heavy-duty, 3000 Watt electric motor coupled indirectly to the antenna shaft, these antennas offer no-stop performance even in presence of windgusts.

FEATURES

- Remotely switchable polarization (horizontal, vertical, circular)
- High azimuth discrimination
- Compliant to IALA V-128, 2007, tab. 5.5
- Functionality 24 h for 360 day/night all-weather conditions.
- Can be remotely driven to select different rotation rates
- Can interface different GEM elettronica radar transceivers
- Maintenance free
- Compact aspect

APPLICATIONS

The antenna system series ASX-2101/HVC • ASX-1901A/HVC is targeted to top-ranked applications, such as:
- Vessel Traffic System (VTS), Vessel Traffic Management & Information Systems (VTMIS)
- Coastal Surveillance & Security
- Surface Movement Guidance Control System (SMGCS)
- Homeland Security

GENERAL DIAGRAM OF CONNECTION

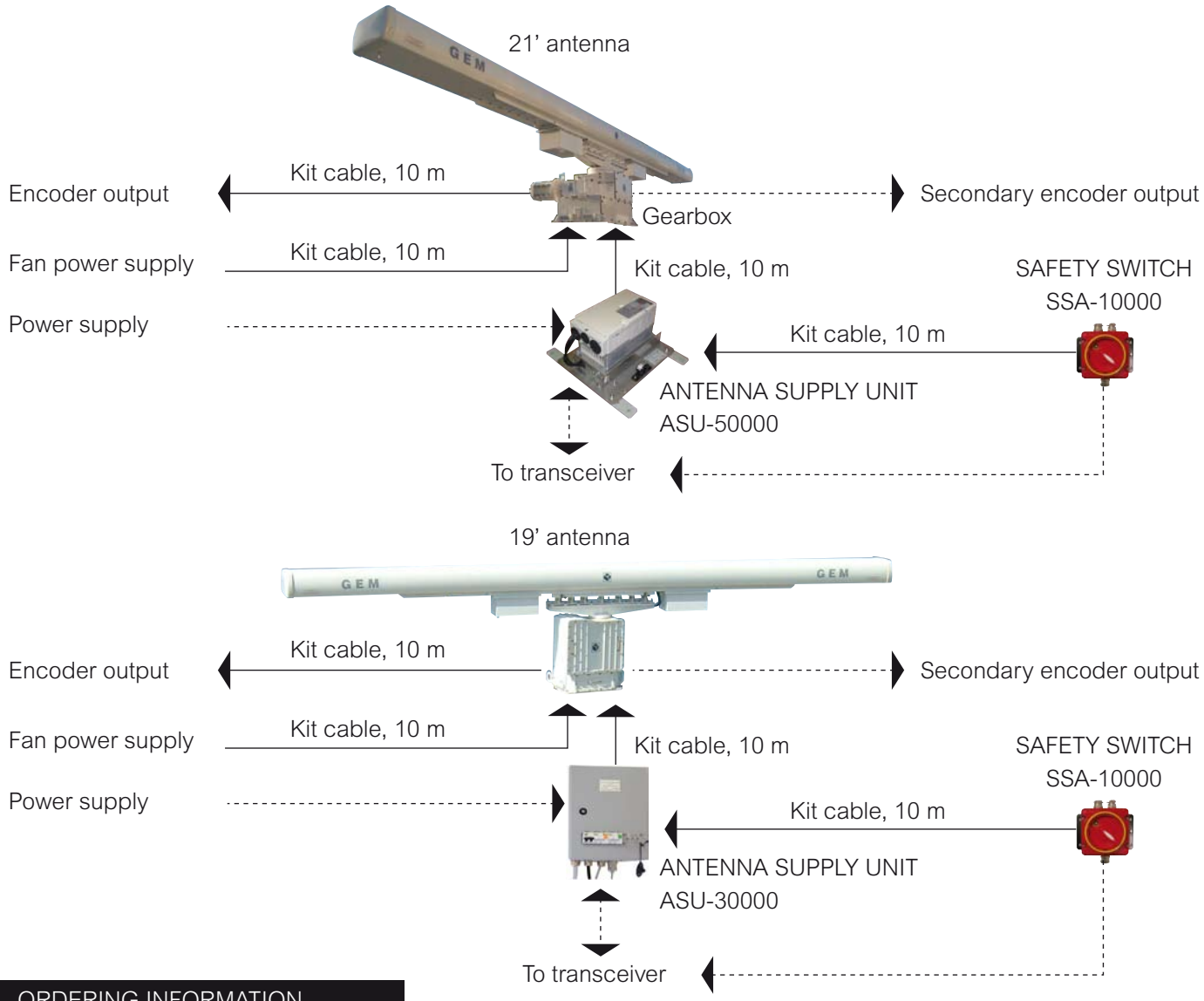

ORDERING INFORMATION

Order Code	Antenna Length	Switchable Polarizations	Nominal center frequencies	Antenna Supply Unit	Safety Switch	Gearbox	Tilt	rpm
ASX-2101/HVC	21 feet (6.51 m)	Horizontal, vertical, circular	9375 MHz	ASU-50000	SSA-10000	MU-3122	TIM-12000	11,22
ASX-2101/HVC/FD	21 feet (6.51 m)	Horizontal, vertical, circular	9225 MHz and 9450 MHz	ASU-50000	SSA-10000	MU-3122/FD	TIM-12000	11,22
ASX-1901A/HVC	19 feet (5.89 m)	Horizontal, vertical, circular	9375 MHz	ASU-30000	SSA-10000	MU-1522X	TIM-11000	16,22
ASX-1901/HVC/FD	19 feet (5.89 m)	Horizontal, vertical, circular	9225 MHz and 9450 MHz	ASU-30000	SSA-10000	MU-1522X/FD	TIM-11000	16,22

SUPPLY COMPOSITION AGAINST EACH ORDER CODE

- Antenna system including gearbox and antenna unit
- Tilt Unit
- Antenna Supply Unit (ASU)
- Safety switch Unit (SSA)
- Connecting cables kit (standard lengths: 10 mt)
- Certificate of conformance
- Packing list

OPTIONS:

- Depending on installation requirements, cable lengths are delivered in accordance with Buyer's instructions
- Can be released at other center frequencies between 8800-9600MHz upon Buyer's requirement
- Use and installation manual in English language

SERIES SPECIFICATIONS

BASIC PERFORMANCE DATA	ASX-2101/HVC	ASX-2101/HVC/FD	ASX-1901A/HVC	ASX-1901/HVC/FD
Antenna type:	Slotted waveguide array			
Nominal Center frequencies	9375 MHz	9225 MHz and 9450 MHz	9375 MHz	9225 MHz and 9450 MHz
Frequency band around each center frequency	80 MHz			
Array length:	21 feet (6.51 m)		19 feet (5.89 m)	
Polarization:	Remotely switchable, triple polarization: horizontal, vertical, circular			
Gain versus isotropic radiator, same polarization:	37.5 dBi ± 1 dB		34.5 dBi ± 0.5 dB	
VSWR:	less than 1.3:1			
Beamwidth (at -3 dB)				
Horizontal:	0.35° ± 0.03°		0.42° ± 0.03°	
Vertical:	11° ± 1°		16° ± 1.5°	
Sidelobes				
Within ± 10°:	less than -28 dB			
Outside ± 10°:	less than -35 dB			
Azimuth encoders:	16384 or 8192 or 4096 pulses per revolution		2048 or 4096 pulses per revolution	
Rotation speed:	11, 22 rpm		16, 22 rpm	
Drive Motor Power:	3.5 kW		1.5 kW	
Operational wind speed:	up to 100 knots			
ELECTRICAL POWER				
Required supply at ASU input:	mono phase, 50/60 Hz			
Voltage:	220 Vac			
Absorption:	less than 3 kW		less than 2 kW	
ENVIRONMENTAL PERFORMANCES				
Operating temperature range				
Standard	from -25° C to +55° C			
With heating unit	from -40° C to +70° C			
Relative humidity:	up to 100% at +40° C with dehydrator			
Vibrations:	in accordance with IEC-60945			
Vibrations/shock:	1g from 0 to 50 Hz			

OUTLINE

dimensions in mm

ANTENNA and ROTATION UNIT

21’ antennas

Weight
Antenna Unit: 220 Kg
Rotation Unit: 245 Kg
Tilt: 31 Kg

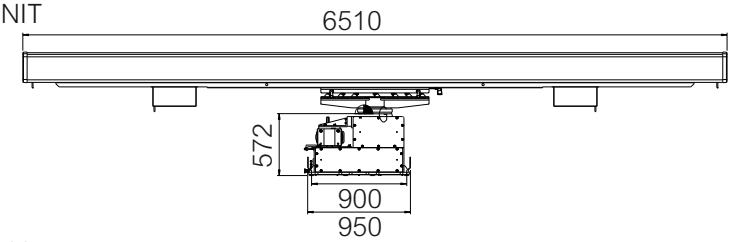

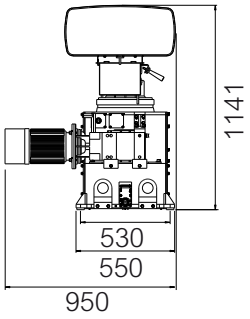

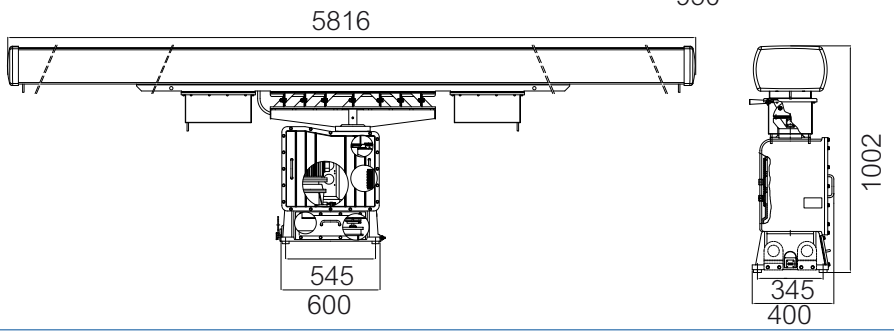

19’ antennas

Weight
Antenna Unit: 120 Kg
Rotation Unit: 150 Kg
Tilt: 25 Kg

ANTENNA SUPPLY UNIT

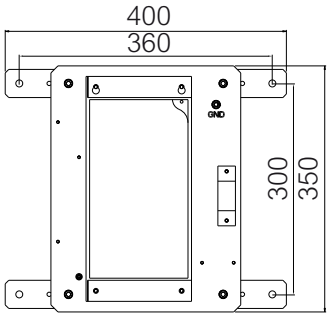

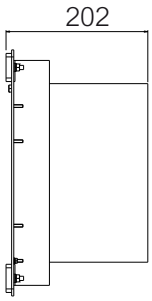

ASU-50000 Weight 10 Kg

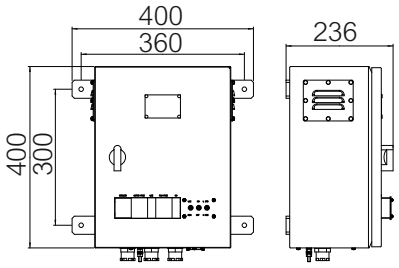

ASU-30000 Weight 10 Kg

SAFETY SWITCH

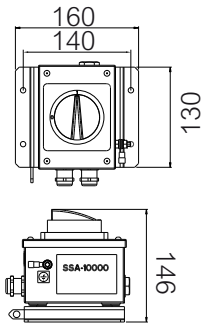

Weight 2 Kg

© January 07, 2015

This brochure should not be considered a contractual offer to sell. The specifications given herein may be changed by the manufacturer, GEM elettronica S.r.l., without notice.